SPEAKMAN®

400 Anchor Mill Rd., New Castle, DE 19720, USA
800-537-2107 | Fax: 800-977-2747
www.speakmancompany.com

COMMANDER® HEALTHCARE

Gooseneck Spouts

S-3345

S-3355

GENERAL SPECIFICATION

Polished chrome plated gooseneck spout for use with foot-pedal valves or surgeon scrub sink fitting. 8” deep gooseneck spout, rigid or swivel. Water conserving device limits flow to 2.2 gpm/8.4 lpm. Meets ASME A112.18.1/ CSA B125.1 and NSF61.

❑ **S-3345**
Deck mounted gooseneck spout. ½” NPSM inlet.

❑ **S-3355**
Wall mounted gooseneck spout. ½” NPSM inlet.

OPTIONS

SUFFIX	DESCRIPTION
❑ BO	Vandal-resistant 0.5 gpm flow control
❑ CA**	No lead for CA AB1953 compliance (S-3345 only)
❑ GB	Vandal resistant 1.5 GPM flow control
❑ LF	2.2 gpm laminar flow control outlet
❑ SO	Rose spray outlet
❑ 4*	3-3/4" deep spread gooseneck spout, rigid or swivel
❑ 5*	5-1/4" deep spread gooseneck spout, rigid or swivel
❑ 9*	9" deep tubular swing spout, rigid or swivel
❑ 12*	12" deep tubular swing spout, rigid or swivel
❑ FC*	2.0 gpm laminar flow control, plain end spout
❑ VB6*	6" deep spread gooseneck spout with vacuum breaker and rigid shanks
❑ VB8*	8" deep spread gooseneck spout with vacuum breaker and rigid shanks

VACUUM BREAKER OPTIONS

SUFFIX	DESCRIPTION
❑ ST	Serrated tip
❑ SW	Swivel spout

*See page 249 for optional spout specifications

** The “SW” option is not available with the “CA” option

This space for Architect/Engineer approval.

Commander — Registered T.M. Speakman Company
© Copyright, Speakman Company, 2011

400 Anchor Mill Rd., New Castle, DE 19720, USA
800-537-2107 | Fax: 800-977-2747
www.speakmancompany.com

Rough-Ins

S-3345

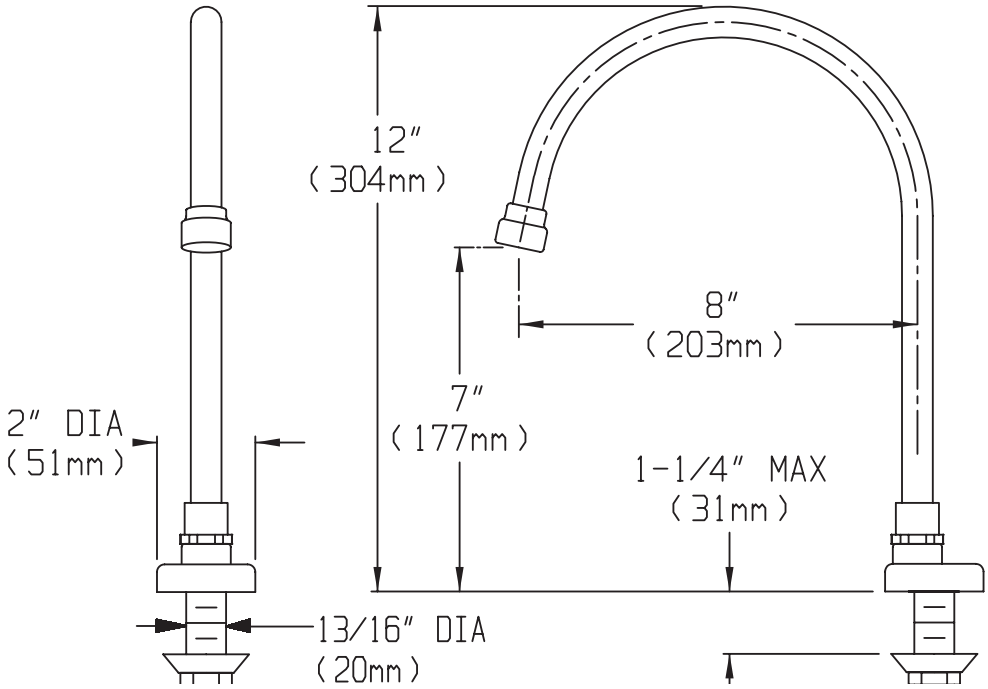

NOTE: All dimensions are in inches unless otherwise specified and are subject to change without notice.
Inlet sized for either coupling or sweat connections. Inlet is 1/2 NPSM inlet.

S-3355

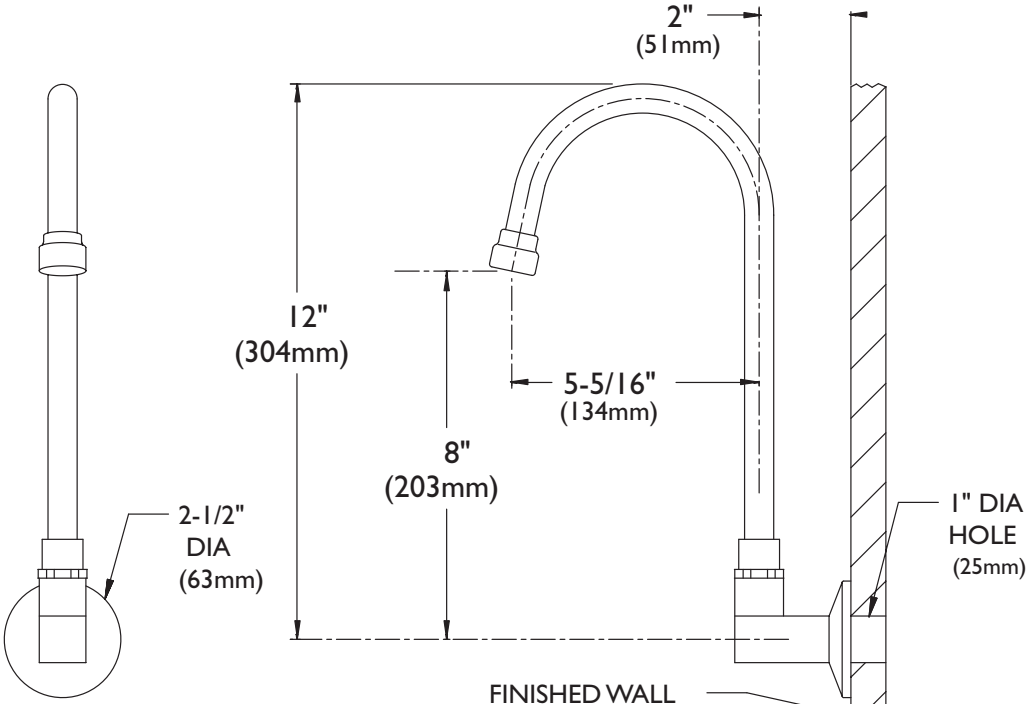

 NOTE: All dimensions are in inches unless otherwise specified and are subject to change without notice. Inlet is 3/8 NPTF.

400 Anchor Mill Rd., New Castle, DE 19720, USA
800-537-2107 | Fax: 800-977-2747
www.speakmancompany.com

Spout -4, rigid or swivel
3-3/4" deep gooseneck

Spout -5, rigid or swivel
5-1/4″ deep gooseneck

Spout -8, rigid or swivel
8″ deep gooseneck

Spout -4FC, rigid or swivel
3-3/4" deep plain end gooseneck;
laminar flow in base of spout

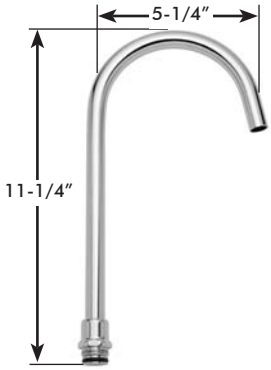

Spout -5FC, rigid or swivel
5-1/4" deep plain end gooseneck;
laminar flow in base of spout

Spout -8FC, rigid or swivel
8" deep plain end gooseneck;
laminar flow in base of spout

Spout -9, rigid or swivel
9″ deep tubular swing spout

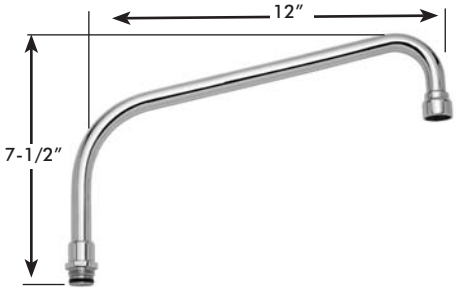

Spout -12, rigid or swivel
12″ deep tubular swing spout

Spout -VB6, rigid
6″ deep rigid vacuum breaker spout

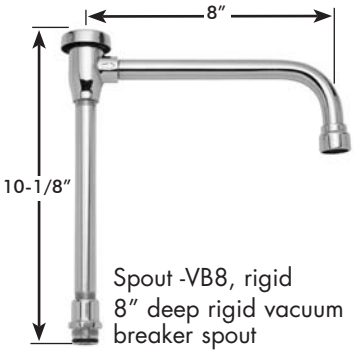

Spout -VB8, rigid
8″ deep rigid vacuum
breaker spout

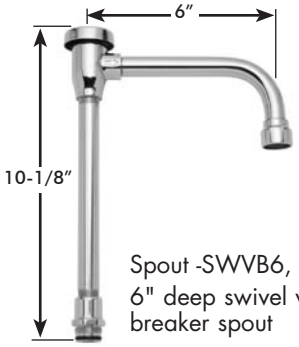

Spout -SWVB6, swivel
6" deep swivel vacuum
breaker spout

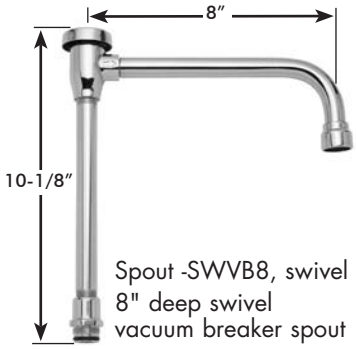

Spout -SWVB8, swivel
8" deep swivel
vacuum breaker spout