SPEAKMAN COMPANY

S-9010 Installation, Operation & Maintenance Instructions

4” CENTERSET SENSORFLO® BATTERY POWERED LAVATORY FAUCET

DESCRIPTION

Speakman SENSORFLO faucet. Battery powered 4” centerset lavatory sensor faucet. Faucet body consists of polished chrome plated removable cover and black powder coated chassis. Sensor/electronic module powered by two (2) 3 Volt DC lithium batteries with waterproof connectors housed above counter in the faucet body. Low battery warning light. New two (2) inlet, one (1) outlet Solenoid design housed above counter in the faucet body. Hot and Cold in-line filters housed above counter in the faucet body. Vandal resistant 60 second time out feature. Water conserving vandal resistant recessed aerator reduces water flow to either 0.5 GPM/ 1.9 LPM or 2.2 GPM / 8.3 LPM to meet requirements of ASME A112.18.1/ CSA B125.1 standard for flow rates. ADA compliant. Note: 3/8” compression soft cone stainless steel flexible hoses are optional.

SPECIFICATIONS

INLET SUPPLY: COUPLING OR 1/2 SWEAT CONNECTION
FLOW RATE: 0.5 GPM/ 1.9 LPM OR 2.2 GPM / 8.3 LPM
SHIPPING WEIGHT: 5.64 LBS

OPTIONS

◊ HS- 2 stainless steel flexible hoses, 3/8”x 1/2" compression	◊ HTS- 1 stainless steel flexible hose for tempered watersystems, 3/8”x 1/2" compression
◊ LF- vandal resistant laminar 2.2 GPM flow control	◊ PVD- polished brass top cover assembly
◊ VRS- vandal resistant screws with wrench	◊ TMV- under-counter thermostatic mixing valve with check valves
	◊ GB- vandal resistant 1.5 GPM aerator outlet device

INSTALLATION

If the highest allowable flow is required, remove the standard 0.5 GPM aerator and install the vandal resistant 2.2 GPM aerator with the wrench provided. Carefully feed Inlets of faucet through deck holes. Mount the faucet to fixture by fastening Mounting Brackets and Nuts to their respective Mounting Studs. Ensure gasket is properly seated on bottom of faucet chassis. Attach supplies to inlet shanks using compression coupling or 1/2" copper sweat connections. DRY CONNECTIONS ONLY, DO NOT USE SEALANT. Remove cover from faucet body by unfastening the two (2) Allen screws located in the front of the unit with the Allen wrench provided. Without loosening the Module Fixing Plate, remove the electronic module cap by unfastening the Phillips Screw. After removing the cap, install two lithium batteries, taking care to ensure correct polarity. Reassemble the module cap. Set the tempered water temperature by adjusting the Temperature Adjusters to the Hot and Cold water lines. Verify the faucet cover gasket is properly seated before placing cover back onto the faucet body. Complete the closing of the faucet by refastening the two (2) Allen screws located in the front of the unit. With drain installed, turn on water and activate the faucet, checking for proper operation and all connections for leaks.

OPERATION

Speakman SENSORFLO faucets are thoughtfully designed for all in mind. Require no handles to turn, lift or push, water flows only when hands are in the lavatory basin. Built in vandal resistant circuitry shuts off the water after continuous flow of approximately 60 seconds. This feature prevents flooding; water is easily turned on again by placing one’s hands under the lavatory spout.

MAINTENANCE (CARE & CLEANING)

Your SENSORFLO faucet is designed and engineered in accordance with the highest quality and performance standards. With proper care it will provide years of trouble free service. Periodically the faucet will require some minor maintenance to keep it performing at peak performance. Periodically check the solenoid filters for debris. If debris is present clean the filters thoroughly. The polished chrome finish of your faucet should be cleaned using mild soap and warm water. Do not use any harsh or abrasive cleaners. Dry immediately with a soft, clean cloth for best results.

ROUGH-IN MEASUREMENTS

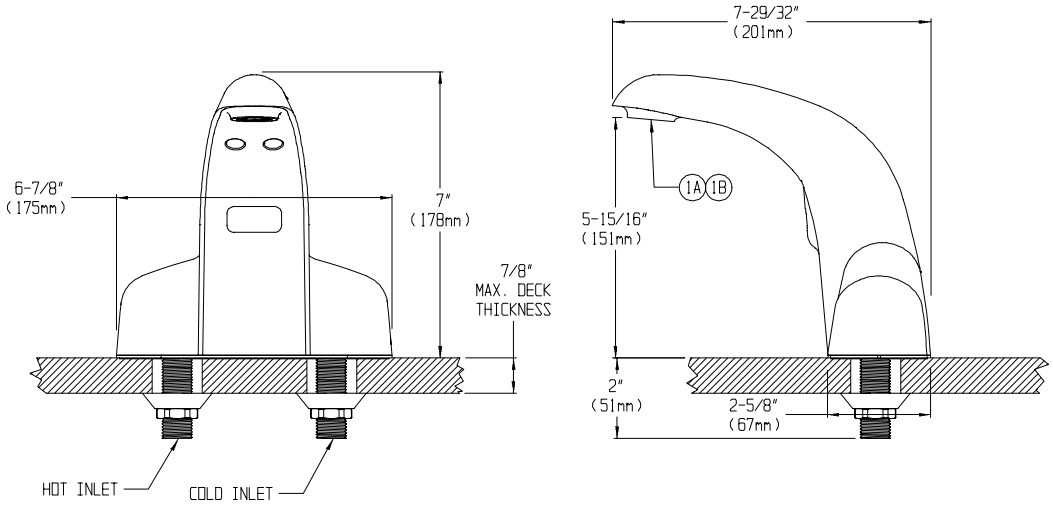

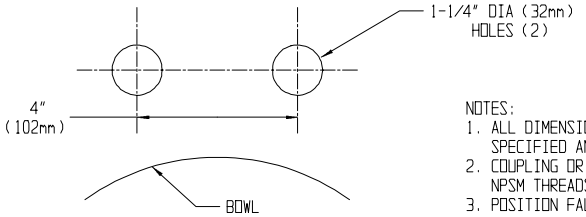

NOTES:
1. ALL DIMENSIONS ARE IN INCHES (MILLIMETERS) UNLESS OTHERWISE SPECIFIED AND ARE SUBJECT TO CHANGE WITHOUT NOTICE.
2. COUPLING OR 1/2 COPPER SWEAT CONNECTION INLETS WITH 1/2-14 NPSM THREADS.
3. POSITION FAUCET AS CLOSE TO THE EDGE OF THE SINK AS POSSIBLE.

REPAIR/REPLACEMENT PARTS

ITEM NUMBER	PART/GROUP NUMBER	DESCRIPTION
1A	RPG05-0674-PC	2.2 GPM AERATOR
1B	RPG38-0128-PC	0.5 GPM AERATOR
NOT SHOWN	RPG66-0044	SOLENOID FILTER SCREEN
NOT SHOWN	RPG76-0039	SOLENOID DIAPHRAM & O-RING REPAIR KIT
NOT SHOWN	RPG76-0041	3V LITHIUM BATTERIES (2)
NOT SHOWN	RPG76-0041-20	3V LITHIUM BATTERIES (20)
NOT SHOWN	RPG76-0041-100	3V LITHIUM BATTERIES (100)
NOT SHOWN	RPG66-0164	MODULE WITH BATTERIES
NOT SHOWN	RPG10-0076	COVER WITH SCREWS (CHROME)
NOT SHOWN	RPG10-0076-PVD	COVER WITH SCREWS (PVD)
NOT SHOWN	RPG05-0791	TEMPERATURE ADJUSTING SPINDLES
NOT SHOWN	G05-0627	CHECK VALVES
NOT SHOWN	G20-1968	THERMOSTATIC MIXER

SPEAKMAN®

PO Box 191 Wilmington, DE 19899 Phone: 800-537-2107 Fax: 800-977-2747

Visit us on the web at www.speakmancompany.com

1/08
REV. 4
92-2527